Task Assignment Process

Last updated: 01/09/2026

- Overview
- Task Creation
  - Transaction Types
  - Type
  - Task Status
  - Task Generation Codes
  - Break Criteria Limit Types
- Task Assignment
  - Task Groups and Task Group Eligibility
  - Task Pools
- Assignment of Users to Task Groups and Task Pools
- Assignment of Tasks to Task Pools
- Assignment of Tasks to Users
  - Just-In-Time Task Assignment
  - Schedule-based Task Assignment
  - Task Assignment Based on Distance
  - Assign Next Nearest Task Based on User's Current Location's Pick Execution Sequence
  - Task Assignment for Manually Assigned Tasks
  - Excluding a User from Task Assignment
  - Task selection from Task List
  - Manage Aisle Congestion in Task Assignment
  - User Metrics
- Exception Behaviors during Task Execution
- Task Completion
- Task Priority Bumping
- Manual Task Release
- Task Re-evaluation
- Task Zone Proximity and Task Path Restrictions
  - Task Zone Proximity
  - Task Path Restrictions
- Replenishment Matching
  - Copying the much-needed attributes to the matched task

Copyright © 2026 Manhattan Associates, Inc.

- Ability to Copy the Pick task priority to the matched task
- Using 'Priority for Replenishment Matching parameter' on Task Pool
- Propagating the vital replenishment matching information from the Pull to Putaway task

Overview

Task Assignment is the process of collecting, organizing, prioritizing, and assigning tasks from execution components to users in Warehouse Management. Planning or Execution components have the ability to create and prioritize tasks for specific business functions using Task Creation Strategies and will send those tasks to Task Assignment to be organized into user-configured pools using Task Pool Strategies. Once in the Task Pools, the tasks are organized either by sequence criteria or by a Task Assignment Schedule that is designed to optimize a specific objective. Users enter the system through the Organization component; they are then assigned to eligible Task Groups and Task Pools through rules configured in Task Eligibility Strategies. Once users are assigned to groups and pools, they are assigned tasks based on their eligibility and the sequence criteria/priority of the task within each pool. Tasks in Task Assignment are tracked from Creation to Completion and this information is shared with Labor and Execution Components.

Process Flow

Task Creation

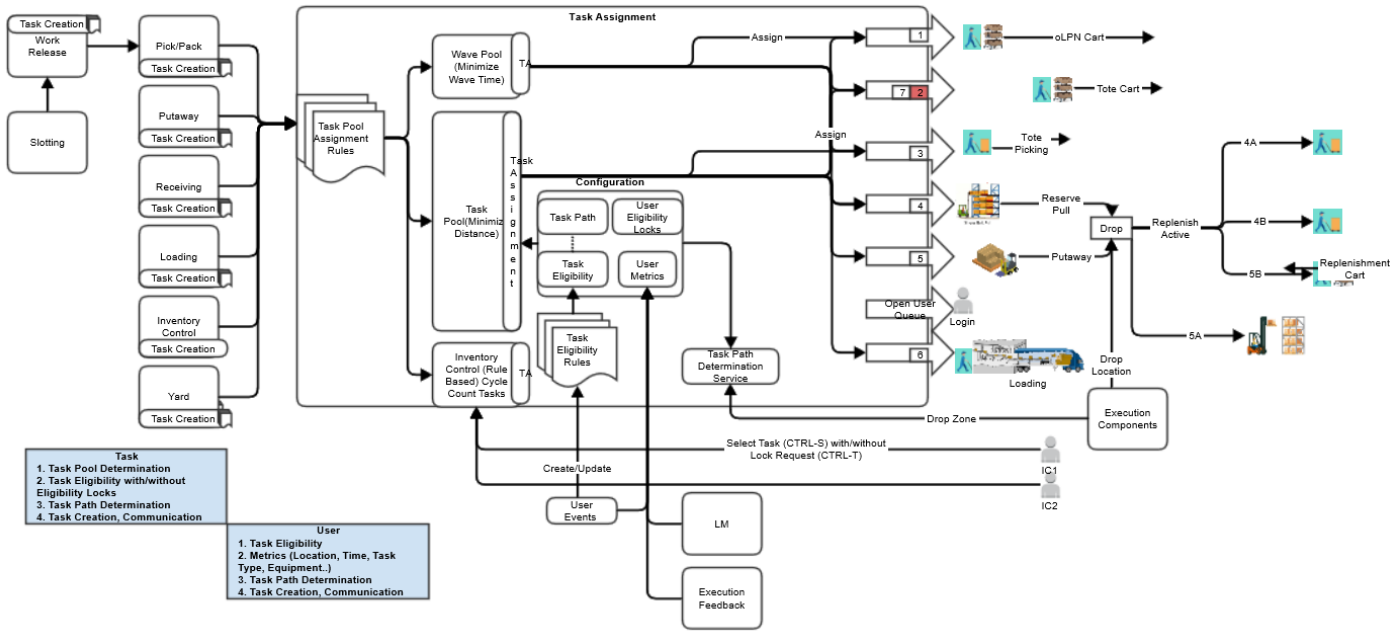

Planning or Execution components can create tasks for assignment using Task Creation Strategies. Each Task Creation Strategy has Task Creation Templates where one can define the transaction, priority, creation status, sequencing method (By Rule or By Proximity), and labor activity of the tasks being created from the strategy. Each Task Creation Template contains rules for task creation as well as a Task Break Criterion in which one can define the limit type and the minimum/maximum threshold to break the task being created.

Tasks created can be estimated by the time it will take to execute. This estimate is determined using one of the configured strategies (for example, these are Machine learning, Labor standards and historical throughput). The time element is utilized for providing estimated work on UDC's department views and schedule-based assignment.

Transaction Types

Seeded transaction types for tasks:

Component	Transaction Type
Pick Pack	Pick
	Pack
	Outbound putaway
	Outbound Sort
	Clear Outbound Sort Location
Putaway	Putaway
Receiving	Receive
Sorting	Sort
	End Container
Flow through	Flow through
LPN Disposition	LPN Disposition

Copyright © 2026 Manhattan Associates, Inc.

DC Shipping	Load
	Unload oLPN
	Weigh Manifest oLPN
	Weigh oLPN
	DeManifest
Inventory Management	Cycle Count
	Create iLPN
	Modify iLPN
Task	Task
Yard	Yard

Type

The system updates the 'type' on the task header as per the task detail type. If all the task details have same 'typeId' then header will use that value and copy to header otherwise it will be null.
This 'type' value is determined only during task creation time in the task component. No further updates happen to this attribute later in the business flow.

Type
Replenishment
Pick/Pack
Pick
Pack
Singles Pick
Deferred Replenishment
Deferred Pick/Pack
Putaway
Outbound Putaway
Cycle Count
PickUp
Travel
Receiving
Slotting
Load

Copyright © 2026 Manhattan Associates, Inc.

Task Status

Task Status allows you to view the status of the task during the task execution process.

Status	Status Code
Created	1000
Unavailable	1500
Held	2000
Ready For Assignment	3000
Assigned	5000
In Progress	7000
Pending Complete	7500
Completed	8000
Pending Cancel	8500
Canceled	9000

Task Generation Codes

Task generation codes give you an indicator of the process which created the task.

Description	Code ID
Wave	WAVE
Stream	STREAM
Lean Time	LEAN_TIME
Flowthrough	FLOWTHROUGH
On Demand	ON_DEMAND

Break Criteria Limit Types

Limit Types	Description
Distinct	Break the task based on a distinct attribute within the task details
Capacity	Break the task according to the UOM capacity of the task
Range	Break the task according to the distance traveled within the task

Task Assignment

Task Groups and Task Group Eligibility

A Task Assignment is capable of determining the users who are eligible for specified tasks by dividing the users into Task Groups. Each Task Group comprises Task Group Eligibility, which provides a list of Transaction Types, such as Pick, Pack, and Putaway. Transaction IDs, Task Movement Zones, and Vehicle Types. If a user is assigned to a Task Group, they are eligible to work on tasks that match the configuration in the configured Task Group Eligibility.

Transaction Types and Transaction IDs determine the types of tasks a user can work on in the warehouse. For example, "Putaway"

can be considered a transaction type and may have a transaction ID, such as "User-Directed Putaway".

Task Groups designed for inexperienced or temporary users can have very limited eligibility and may be restricted to a single transaction type (Picking/Putaway) and specific zones (Ecom Pick Mod), with no access to vehicles. Meanwhile, Task Groups designed for superusers, experienced users, or supervisors, can have multiple eligibility groups, allowing a user to operate various types of vehicles throughout the warehouse while performing different types of tasks. Users can be manually assigned to Task Groups by a supervisor or automatically assigned according to rules defined in a Task Eligibility Strategy.

> **Note**: All tasks must have an Assignable Task Group. When a task has an assignable task group(s), the solution restricts the task to be picked up only by the users eligible to that task group. When a task does not have an Assignable Task Group, it can be picked up by anyone.

Examples

For the Replenishment Tasks: Eligible to pick/pull from any source task movement zone and eligible to perform the Put in the specific destination task movement zone

Below are the task groups and task group eligibility configured:

Task Group A

Transaction Type	Transaction	Vehicle Type	Source Zone	Exact Source Zone match	Destination Zone	Exact Destination Zone match
Pick	null	null	null	FALSE	Active Zone A	True or false (Does not matter)
Putaway	null	null	null	FALSE	Active Zone A	True or false (Does not matter)

Task Group B

Transaction Type	Transaction	Vehicle Type	Source Zone	Exact Source Zone match	Destination Zone	Exact Destination Zone match
Pick	null	null	null	FALSE	Active Zone B	True or false (Does not matter)
Putaway	null	null	null	FALSE	Active Zone B	True or false (Does not matter)

Task Group C

Transaction Type	Transaction	Vehicle Type	Source Zone	Exact Source Zone match	Destination Zone	Exact Destination Zone match
Pick	null	null	null	FALSE	Active Zone C	True or false (Does not matter)
Putaway	null	null	null	FALSE	Active Zone C	True or false (Does not matter)

Let us consider that the following replenishment tasks have been created:

Task ID	Transaction Type	Task Detail	Source Zone	Destination Zone

Task 1	Pick	1	Reserve Zone A	Active Zone A
Task 2	Pick	1	Reserve Zone A	Active Zone B
Task 3	Pick	1	Reserve Zone B	Active Zone C
Task 4	Pick	1	Reserve Zone C	Active Zone A

After the task group eligibility check, the system will assign the 'Assignable task groups' as follows:

Task ID	Assignable Task groups
Task 1	Task Group A
Task 2	Task Group B
Task 3	Task Group C
Task 4	Task Group A

Note: When a user is logged in with a specific task group and is scanning a task in 'Enter Task' mode, which is a valid task in the system, but the user's logged-in task group is not an assignable task group for the entered task, then the system will show a specific error message "Invalid Task group for the task".

Task Pools

Task Assignment is capable of separating tasks into distinct task pools in order to assign tasks to users using different methodologies. Task Pools are usually defined through attributes on the task; for example, the system can separate tasks into task pools based on the priority, transaction type, transaction name, location, or any other attribute of the tasks. The diagram below displays a few examples of how users can define task pools. Each Task Pool is configured with an assignment method. The assignment method of the Task Pool dictates the way the tasks are ordered and distributed to the users. If the assignment method is "Just in Time" assignment, the system sequences all the tasks in the pool based on a configured set of sequence criteria and assigns the tasks to users based on user requests. If the assignment method is "Scheduled" assignment, the system uses the configured Task Pool Schedule Parameter to create a schedule that assigns tasks to users based on a configured objective (Minimum Weighted Completion Time, Minimum Makespan, etc).

The task pool also dictates if the system will perform vehicle eligibility for all of the tasks in the task pool when assigning tasks or determining task paths. If the task pool does consider vehicle eligibility, the system will only assign tasks in this pool to users logged into the specified vehicles. If task pool does not consider vehicle eligibility, the system will assign tasks to users that are not logged into the specified vehicles.

Multiple task pools can be assigned to a user in-just-in-time assignment. Users can hop from one pool to another based on the priority of the Task Pool defined for a user in User Task Pool Eligibility UI. Maximum number of users on Task Pool can be configured. If the same is set to null, it means there is no restriction on the number of users in the pool. During Assign task, the maximum users on a Task Pool is checked before assigning user to the task pool. If more than one task pool is assigned to a user, system pool will also need to be explicitly configured.

Task Pools are not a mandatory configuration, each Task Assignment deployment will have a seed system pool. The system pool will keep track of all tasks and users within the warehouse and will assign tasks to users based on the eligibility and priority of the task. This system pool is meant to aid in configuration to warehouses that do not require a complex assignment of tasks.

Copyright © 2026 Manhattan Associates, Inc.

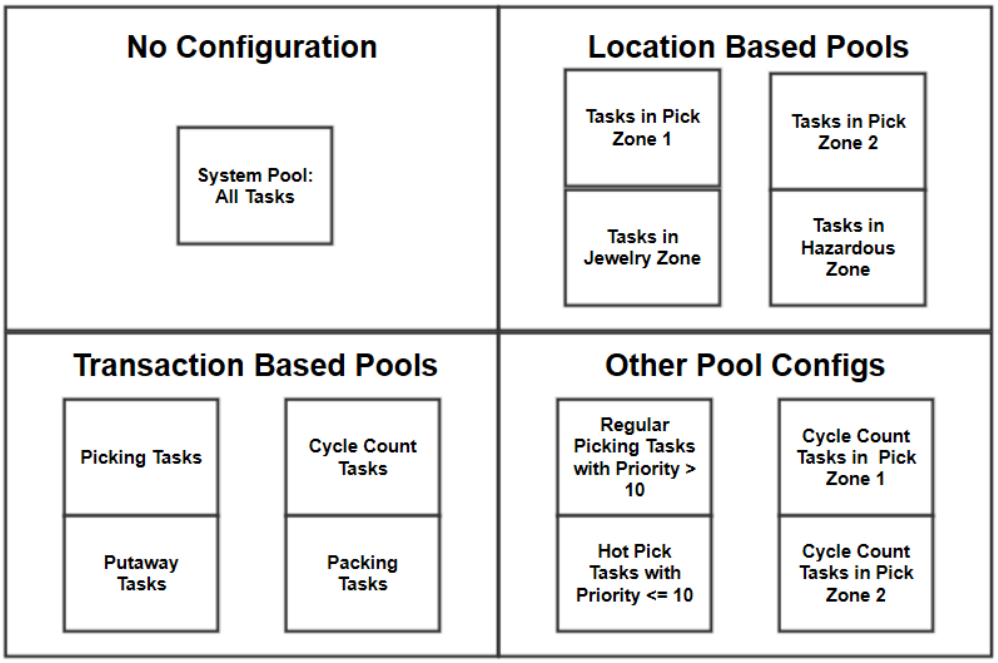

The base recommendation is to have separate task pools configurations instead of having a default system task pool for the complex task assignment scenarios. Also, base recommends having separate task pool strategies as per the transaction type and type of the task.

During the task creation process, while assigning a task pool to the task, the system will first check if any task pool strategy is available matching the task's transaction type and type id.

- If found, then the system will use that task pool strategy to determine the task pool.
- If not found, then the system will use the default or active task pool strategy.
- If none of the above are found or rules satisfied, then the system will assign the task into 'System task pool'.

Assignment of Users to Task Groups and Task Pools

Users enter the system through the Organization component. Once they are configured, they enter the Task Assignment component and are assigned to Task Groups and Task Pools either manually or through Task Eligibility Strategies or automatically. The organization component sends events to the task component when a user is created or updated and using that information, the task component runs the eligibility rules to determine the task group and task pool for the user. Each Task Eligibility Strategy includes a Task Eligibility Criterion with rule conditions to choose users to enter the Task Assignment. Each Task Eligibility Criteria has a set of Task Group Eligibility and Task Pool Eligibility Templates in order to tie the criteria to Task groups and Pools. Among the Task Group Eligibility Templates, one can define a default task group, and among the Task Pool Eligibility Templates, one can prioritize the task pools in order in which the users should work.

When Users are assigned to Task Groups and Task Pools through the Task Eligibility Strategy, Task Assignment creates records for User Task Group Eligibility and User Task Pool Eligibility. The User Task Group Eligibility lists the Task Groups a user is eligible to work in. The User Task Pool Eligibility lists the Task Pools a user is eligible to work in as well as prioritizes the Task Pools for said user. This allows for users to jump between pools in order to complete higher prioritized tasks. If a Task Eligibility Strategy is not configured, a supervisor can manually assign users to task pools and task groups by creating User Task Group Eligibility and User Task Pool Eligibility themselves. Multiple task pools can be configured in Task Eligibility Strategy >> Task Pool Eligibility Criteria based on priority.

When a user enters a Task Assignment and is assigned a Task Group through rules, a record in User Defaults is also created. User Defaults provide the Default Task Group, Printer, Vehicle Type, and Location for the User so they can be immediately assigned tasks once they enter the system without having to go through the rule framework again. User Defaults can also be created/edited manually by a supervisor.

Copyright © 2026 Manhattan Associates, Inc.

When a user is assigned to a task group, the user can work only on a specific area or type of transaction as configured in task group eligibility. If a user has no task group assigned, then the user (with no-restriction applied) can work on any available task.

When the '**Refresh user configuration**' option is selected in 'Task Eligibility Strategy' UI , the system runs the rules against all the available users and configured rules. As part of this process, all the non-matching user task group eligibility records are deleted (if created earlier) and all non-matching user task pool eligibility records are updated with the system task pool. The system creates/updates the new data as per the matching rules.

Since '**Refresh user configuration**' will delete and/or update the existing user eligibility records, it's advisable to restrict access to the admins only. Also, this action should not be done when an operation is in progress, otherwise the floor user will experience discrepancies in the user access or defaults while executing the task.

We don't recommend using '**Refresh user configuration**' for any user level change, such as changing the role of a user or adding a new user etc. If there is a need to update the user eligibility records for any type of user level change, then the recommendation is to enable the '`task.orgUserEvent.handling`' application parameter so that the solution will execute rules and change the configuration for specific users upon user change. The system deletes the existing records only if there is an active Task Eligibility Strategy configuration is present.

.

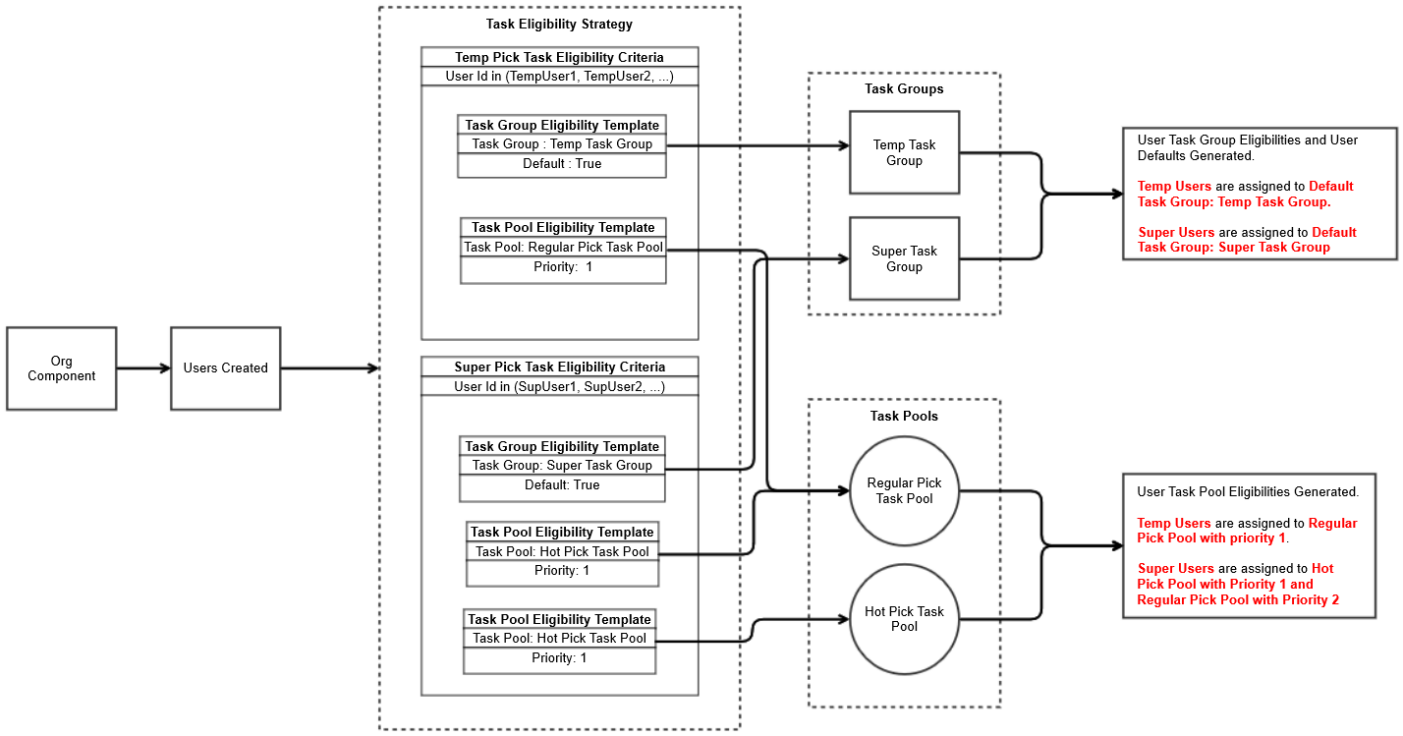

Assignment of Tasks to Task Pools

Tasks are created by Planning components and are divided into Task Pools when they enter a Task Assignment. The rules to separate these tasks into Task Pools are configured in Task Pool Strategies where each strategy contains Task Pool Criteria that tie tasks with specific attributes to a task pool. Once tasks are assigned to task pools, they are then either sequenced based on sequence criteria given within the pool or they are added to the Task Eligibility Matrix within the Task Scheduling Algorithm. If a Task

Copyright © 2026 Manhattan Associates, Inc.

Pool has a "Just In Time" assignment method, the tasks will be re-sequenced every time a task enters a pool or there is a change in any task in the pool that affects the sequence criteria. For example, if the pool is sequencing the tasks in order of ascending priority and a task in the pool is re-prioritized, the tasks in the pool need to run through the sequence criteria logic again to be re-sequenced.

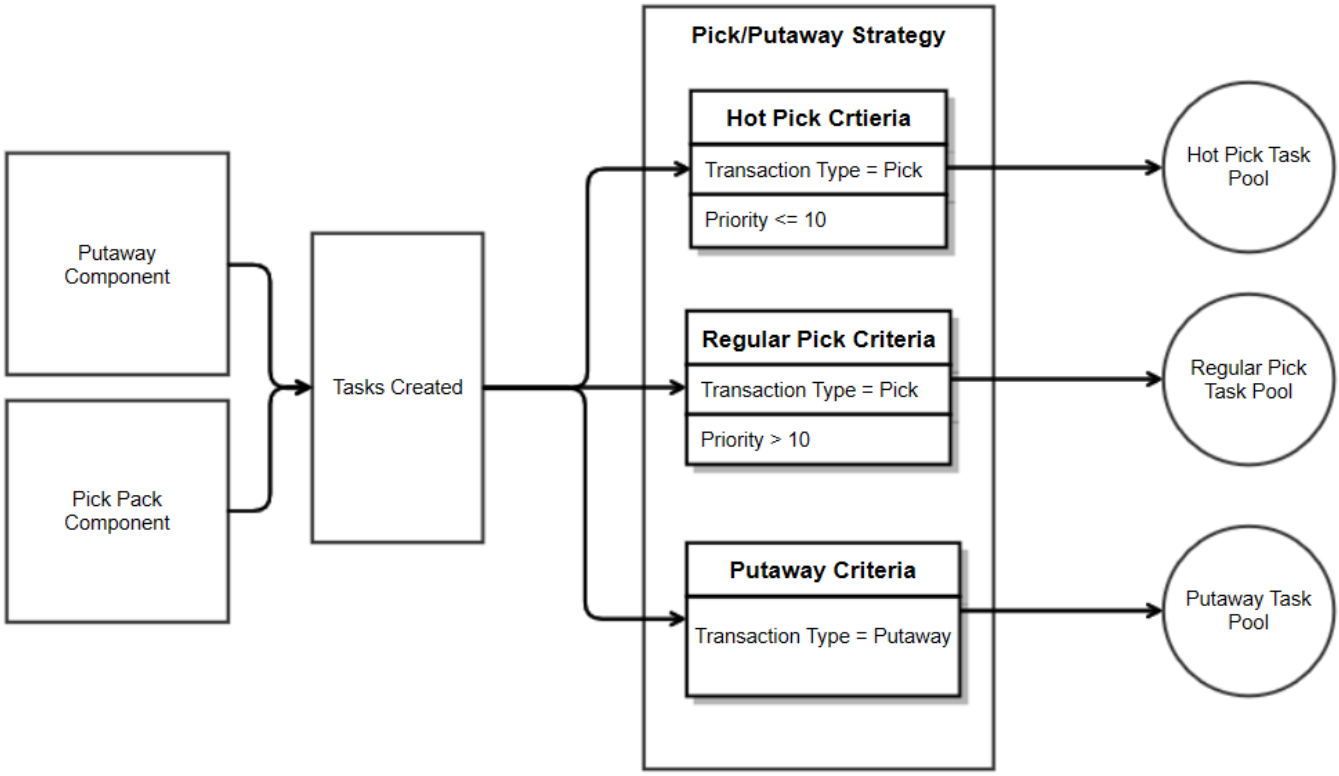

Assignment of Tasks to Users

Just-In-Time Task Assignment

- When the solution uses the Just-in-Time assignment method for a task pool, tasks within the pool are sequenced according to the task pool's sequence criteria. Once users enter the task pool, they are assigned tasks in the order in which they are sequenced.
  When the task pool sequencing criteria are not defined or configured, the solution has no default sequencing. In these cases, the tasks are sequenced by Created Time.
- Every time a user requests a task, the Task Assignment runs through the list of tasks in the pool and performs eligibility checks, determining whether the user can work in the Task Zone, Vehicle Type, and Transaction Type for each task. After applying the sequencing criteria, the user is assigned the first task they can execute on the list.
- When the user exits the task execution, the solution postpones that task and makes it the last task for the current user in the current session. While assigning the next task to the user in the same session, the postponed task is always presented as the last task after applying the task pool sequencing criteria.

Task pool task sequencing during task assignment (This is applicable to all the sequencing attributes):

1. The system will first give preference to all the in-progress tasks.
2. Then the system will assign the tasks in 'Assigned' status in ascending order of assignment time.
3. Then the system will apply the task pool sequencing criteria to all the 'Ready for assignment' tasks.
4. Then the system will assign the postponed tasks to the user (tasks which were postponed due to exceptions in the same user

session).

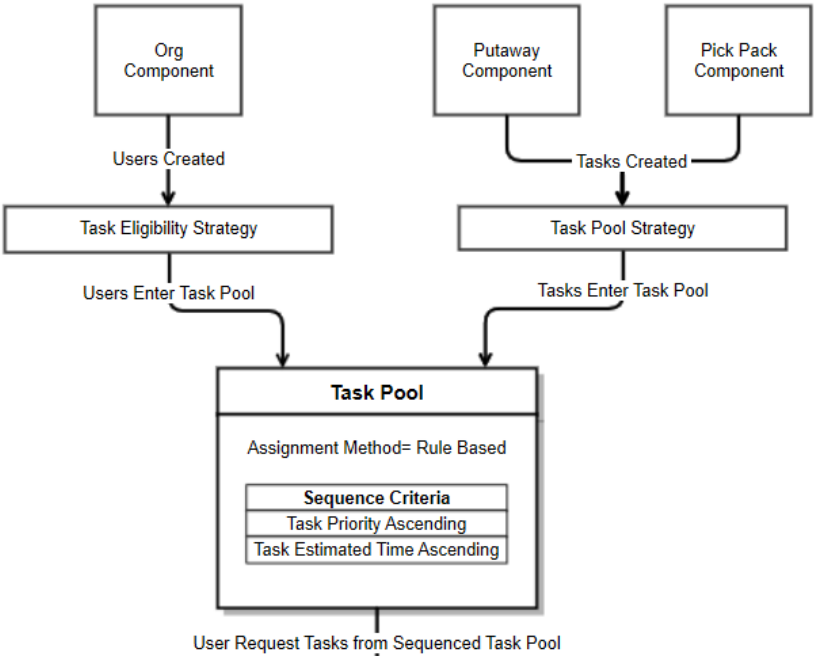
Org Component
Putaway Component
Pick Pack Component
Users Created
Tasks Created
Task Eligibility Strategy
Task Pool Strategy
Users Enter Task Pool
Tasks Enter Task Pool
Task Pool
Assignment Method= Rule Based
Sequence Criteria
Task Priority Ascending
Task Estimated Time Ascending
User Request Tasks from Sequenced Task Pool

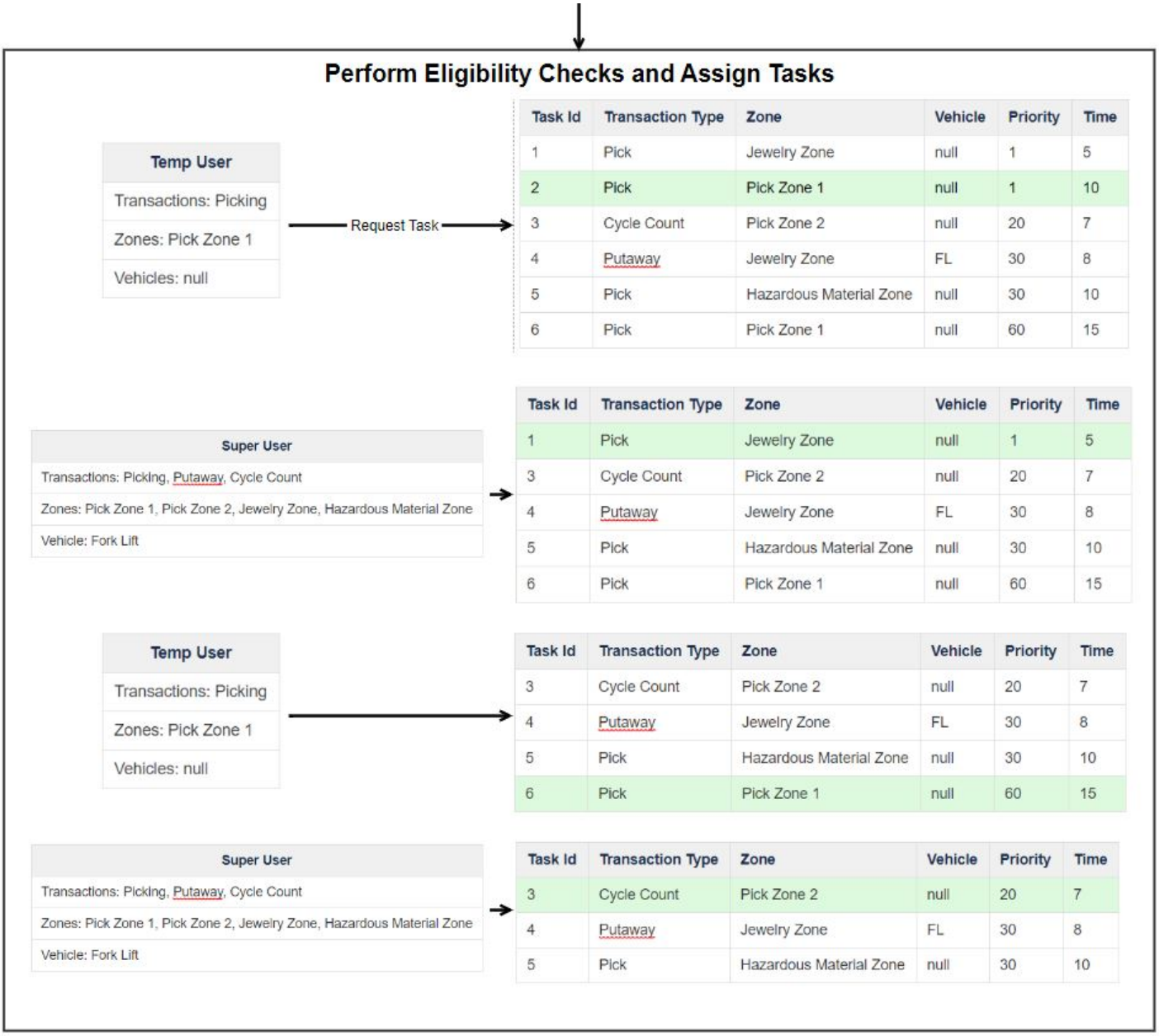

Schedule-based Task Assignment

If the Assignment Method for a Task Pool is scheduled, the tasks within the pool will be distributed across the users within the pool in order to form a static schedule.

The user can configure the Task Assignment job scheduler to create a schedule in order to complete one of two possible objectives: Order by sequence criteria or minimize weighted completion time. If the objective is to order the tasks by sequence criteria, the system sequences the tasks within the tool using the defined sequence criteria of the pool and creates a schedule by assigning users' tasks that they are eligible for. To achieve this objective, the sequence criteria must be configured for the pool. If the objective is to minimize prioritized completion time, the schedule minimizes the total time to complete all tasks within the schedule while completing the highest priority tasks first. Travel distance can be calculated using Task Zone Proximity, Location Sequencing, or DC Layout.

Refer Task scheduler guide for complete details on the Task Assignment job scheduler configuration.

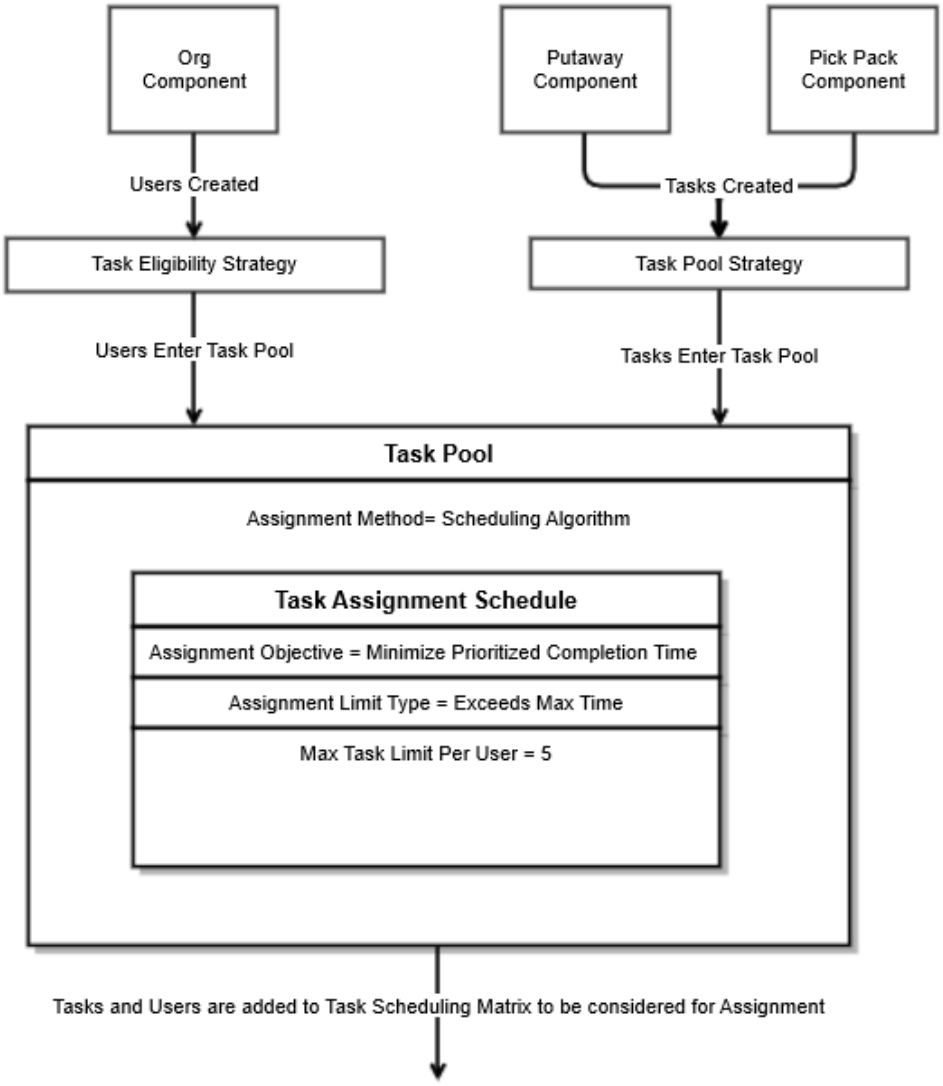
Org Component
Putaway Component
Pick Pack Component
Users Created
Tasks Created
Task Eligibility Strategy
Task Pool Strategy
Users Enter Task Pool
Tasks Enter Task Pool
Task Pool
Assignment Method= Scheduling Algorithm
Task Assignment Schedule
Assignment Objective = Minimize Prioritized Completion Time
Assignment Limit Type = Exceeds Max Time
Max Task Limit Per User = 5
Tasks and Users are added to Task Scheduling Matrix to be considered for Assignment

	Task 1	Task 2	Task 3	Task 4	Task 5	Task ...
User 1	NOT ELIGIBLE	ELIGIBLE	NOT ELIGIBLE	ELIGIBLE	NOT ELIGIBLE	ELIGIBLE
User 2	ELIGIBLE	ELIGIBLE	ELIGIBLE	ELIGIBLE	ELIGIBLE	ELIGIBLE
User 3	ELIGIBLE	ELIGIBLE	ELIGIBLE	ELIGIBLE	ELIGIBLE	NOT ELIGIBLE
User 4	ELIGIBLE	NOT ELIGIBLE	ELIGIBLE	ELIGIBLE	ELIGIBLE	ELIGIBLE
User 5	NOT ELIGIBLE	NOT ELIGIBLE	ELIGIBLE	ELIGIBLE	NOT ELIGIBLE	NOT ELIGIBLE
User 6	NOT ELIGIBLE	ELIGIBLE	ELIGIBLE	NOT ELIGIBLE	ELIGIBLE	ELIGIBLE

Task Assignment Schedule is formed based on objective selected in Task Assignment Schedule Entity

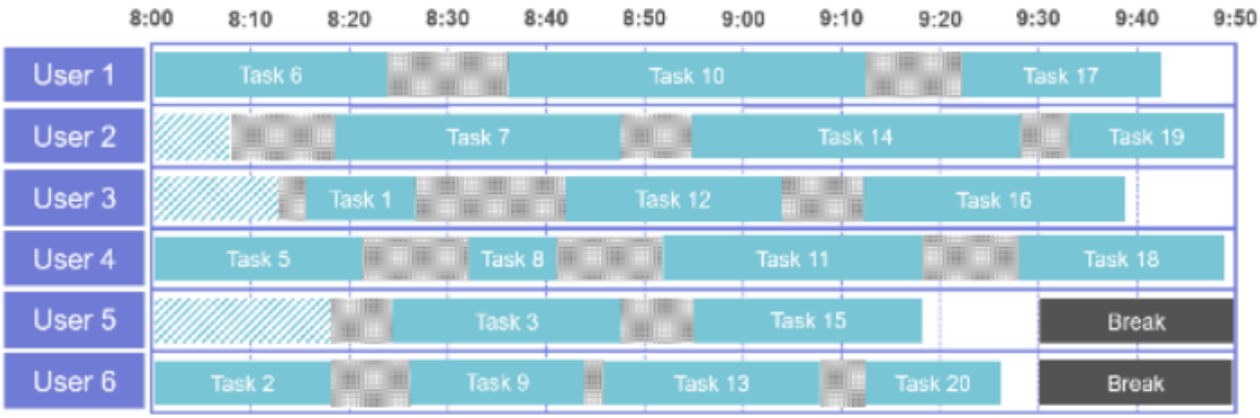

When a task Assignment creates a schedule for users in a task pool, one can view the created plan through the Task Assignment Plans UI. The Task Assignment Plans UI may have multiple records; the current active plan is the task assignment plan with status of 1. The task assignment plan record provides the task pool schedule parameter, the assignment objective, the maximum task limit, and the maximum time limit of the schedule.

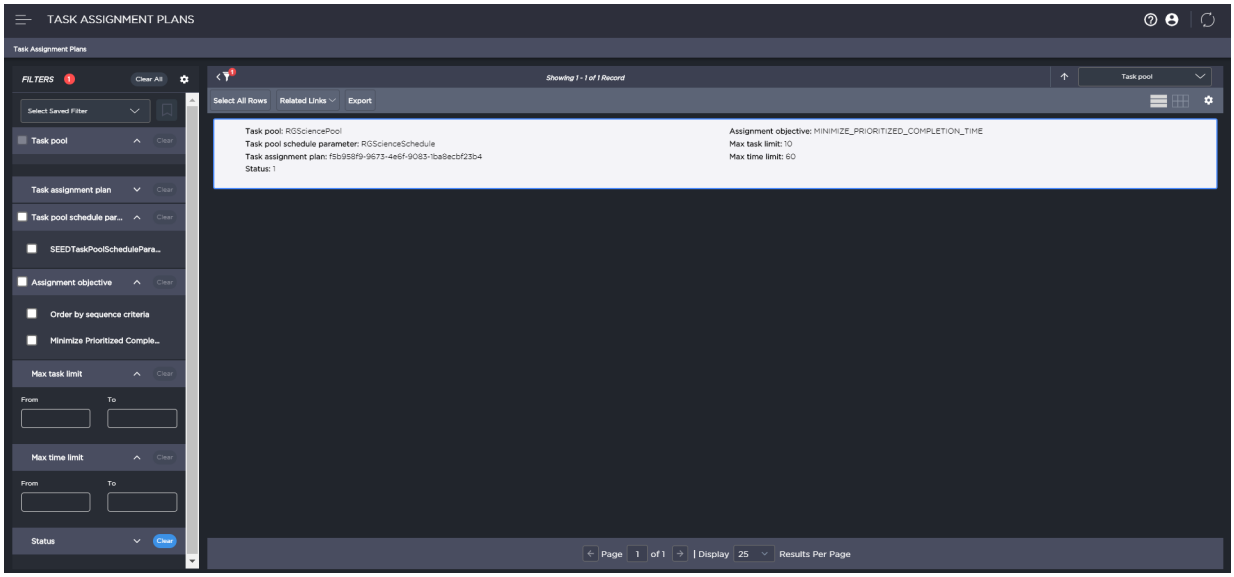

Users can view the assignment of tasks to users through the Task Assignment Plan Details UI. Users can select the Task Assignment Plan and navigate to the Task Assignment Plan Details UI through the related link. The Task Assignment Plan Details record provides the following information for visibility:

Copyright © 2026 Manhattan Associates, Inc.

Property	Description
Task	The Task Id of the Task that should be assigned
Task Sequence	The sequence in which to complete the task
Recommended User	The user the system recommends should complete the task
Expected Start time	Expected time the user should start the task
Expected end time	Expected time the user should end the task
Expected transition distance	The distance the user must travel from the end of the previous task to the start of this task
Expected execution distance	The distance the user will travel to complete the task
Expected idle time	The amount of time the user must wait before they can start the task
Expected execution time	The amount of time it will take for the user to complete the task
Expected transition time	The amount of time it will take the user to travel from the end of the previous task to the start of this task
Reverse Task Sequence	A flag that indicates whether the user should perform the task in reverse task detail order or not

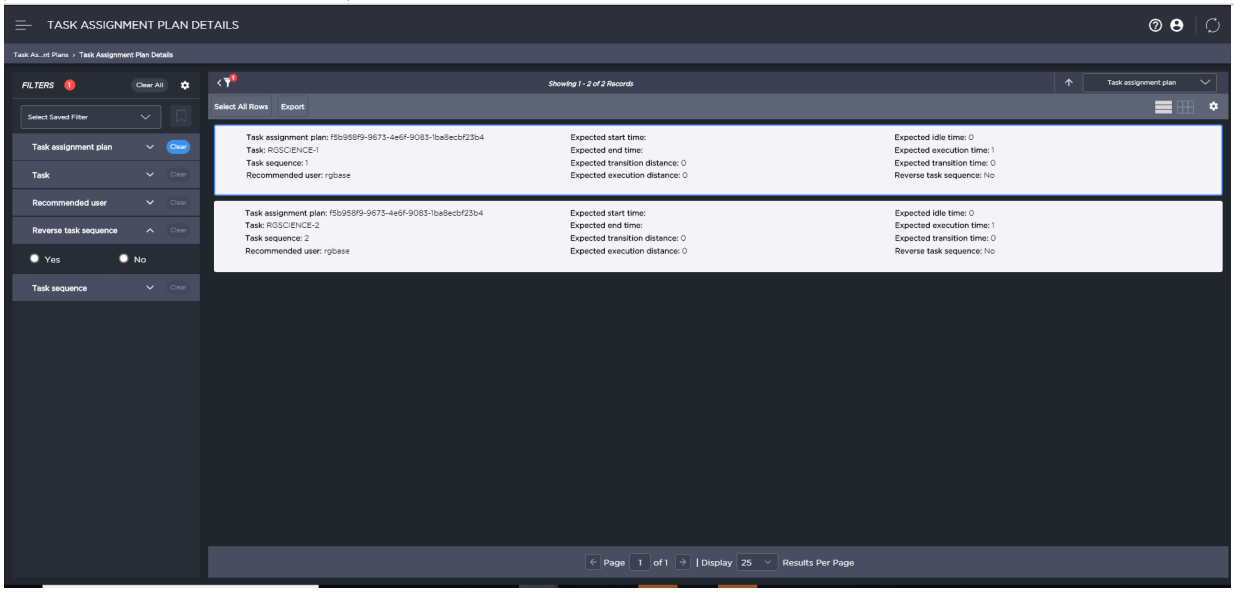

Task Assignment Based on Distance

The Task Assignment component uses many factors to determine to assign tasks to users. Two such factors are the distance the user travels in order to complete the task and the distance the user travels from the end of one task to the beginning of another. The system uses distance along with vehicle information in order to estimate travel time for the user. Distance measurements are collected from two sources in Task Assignment; the system is either pulling distance calculation information from DC Layout or from Task Zone Proximities (referenced below). If the system is assigning tasks to users based on a task assignment schedule, then the system should have DC Layout configured in order to calculate the distance at the location level. If the system is assigning tasks to users based on "Just In Time" assignment, the system should have Task Zone Proximities configured in order to calculate the distance at the zone level. The Zone and Location information for each task is pulled from the source location and target location of the task details. The system uses these locations in order to determine the distance traveled to complete a task and the distance traveled to start a new task. Task assignment also takes the exception location of a task into account when using distance

Copyright © 2026 Manhattan Associates, Inc.

calculation in order to assign tasks to users.

Assign Next Nearest Task Based on User's Current Location's Pick Execution Sequence

Based on the parameters configured, the solution assigns the next nearest task based on the user's current location and the location's pick execution sequence. The solution evaluates the Start and End location sequence and location zone attributes on all tasks (except for IB and OB putaway tasks) and during exceptions such as task exit.

This capability is only supported for JIT task assignment mode.

Configuration: To enable this feature, configure the task sequencing attribute, Task.Nearest Location Sequence in the task pool sequencing criteria.

Note: Do not configure the existing 'Task. Location Sequence' attribute when the task pool sequencing criteria are configured with Task. Nearest Location Sequence.

Zone Proximity

When Sequencing attribute *Task.Nearest Location Sequence* is configured, and zone proximity configurations are available; then, the solution will consider the zone proximity distance first and then will assign the nearest task within the zone.

Note: Do not explicitly configure Task.Proximity in sequencing criteria when *Task.Nearest Location Sequence* is configured.

Assume that a zone has the following data:

- Aisle A: Locations: A-1 to A-10 and Pick Execution Sequence: 1 to 10
- Aisle B: Locations: B-1 to B-10 and Pick Execution Sequence: 11 to 20

Picking Task Details:

	Task 1		Task 2		Task 3
Detail	Location	Detail	Location	Detail	Location
1	A-1	1	A-4	1	B-1
2	A-4	2	A-7	2	B-3
3	A-8	3	A-9	3	B-4

Example 1: Zone Proximity Configurations are not Available

When zone proximity configurations are not available, and the task pool sequencing criteria are configured as Task.Nearest Location Sequence, then:

- The solution assigns the nearest task across the zones. Assume that the solution assigns Task 1 and the user completes the last task detail at location A-8.
- The solution assigns Task 3, which is nearest to the user, based on the pick execution sequence of the location.

Example 2: Zone Proximity Configurations are Available

When zone proximities are configured (assume each Aisle is a task movement zone), and Task Pool sequencing criteria are configured as Task. Nearest location Sequence:

Copyright © 2026 Manhattan Associates, Inc.

- The solution assigns Task 1, and the user completes the last task detail at location A-8.
- The solution assigns Task 2, which is nearest to the user within the zone. When multiple tasks are there in a zone, the solution utilizes the pick execution sequence to determine the nearest task.

Configure the following additional sequencing parameters if you want the solution to search for the next task in both ascending/descending and reverse order:

- Should the system look for the next task in both ascending and descending order from the user's current location sequence?
- Should the system present the next task for execution in reverse order?

Refer to the Task Management Configuration Guide for more details.

Example 3: Additional Sequencing parameters are enabled

Assume that Zone A has the following data:

- Locations: A-1 to A-16
- Pick Execution Sequence: 1 to 16
- Picking Task Details:

	Task 1		Task 2		Task 3		Task 4
Detail	Location	Detail	Location	Detail	Location	Detail	Location
1	A-1	1	A-1	1	A-5	1	A-8
2	A-4	2	A-2	2	A-8	2	A-7
3	A-6	3	A-10				

After the user completes Task 1 at location A-6, there are 2 tasks (Task 3 at A-5 and Task 4 at A-8) which are near to the user's current location, A-6. The solution does the following:

- If the parameter *Should the system look for the next task in both ascending and descending order from the user's current location sequence?* is enabled, the solution assigns Task 3 to the user as A-5 is nearer to A-6 compared to A-8.
- If the parameter *Should the system present the next task for execution in reverse order?* is enabled the solution assigns Task 4, Detail 2 (A-8) first and then Detail 1 (A-7). Because Task 2 is starting at A-1 and Task 4 is starting at A-8, which is nearer to Task 1 (A-6).
- If the configuration is done to perform a search in ascending order from the user's current location, then the solution assigns Task 4 after the user completes Task 1 at A-6.

After the task execution, the user's current location is updated.

Task Assignment for Manually Assigned Tasks

- If tasks are manually assigned to users from the UI (using the Tasks UI), then the tasks in In-Progress followed by Assigned status is sequenced based on the task pool sequence criteria (if defined) of the user.
- If task pool sequence criteria is not defined, a default sequencing criteria (assigned date time and task id) is used.
- Once Users enter the task pool, they are assigned tasks in the order in which they are sequenced. Every time a user requests a task, Task Assignment will run through the list of tasks in In-Progress status and will suggest the first task in the list (if the task was not skipped by the user in the current user's session). When, the In-Progress tasks are suggested to the user then the, Task Assignment will run through the list of tasks in Assigned status, and will suggest the first task in the list (if the task was not skipped by the user in the current user's session).

Copyright © 2026 Manhattan Associates, Inc.

- The supervisor has the ability to un-assign the task from Task UI.
  - When the task is unassigned from the UI, the task is postponed to the last on the task eligibility list.

Excluding a User from Task Assignment

A user can be marked as an excluded user for a task. An example of such a type of business scenario is: If a user is performing a count on the location which is triggering a recount task due to variances found in the location, then the same user should not be executing the recount task again. Cycle count process can choose to mark that user as an excluded user. In this case, task assignment will honor that and won't assign the task to the user who is marked as the excluded user. In 'Enter Task' mode, the system will show an error message to the user when the user who is trying to execute the task is also marked as an excluded user on the task.

When a task is already assigned to a user, the system won't check for the excluded user. The assumption is that a supervisor assigning tasks via UI is a conscious/intentional decision.

Task selection from Task List

- The system can be configured to show the list of eligible tasks to the user. When the selected task strategy parameter 'Should the system show the list of eligible tasks ?' is configured as True, the system will show the list of tasks as per user's eligibility. The user can select one of the tasks from the list to begin the execution.
- The task list will have information such as task id, transaction type, priority and source zone.
- Users can view a maximum of 25 tasks on a mobile screen.
- Users can refresh the task list using 'refresh task list' mobile action button.
- If there is only one task to be displayed, take the user directly into the task
  - This behavior is determined as per the configuration parameter 'If there is only one task to be displayed, will the system take the user directly into the task execution?'
- When a user is selecting a task from the list and by that time, if the task is already assigned to another user, then the system shows an error message to the user. Users can choose another task from the list or users can refresh the list to select the next task.

Task Exit Exception Behaviors in Task List Mode

- Unassign Task:
  - This exceptional behavior will unassign the user from the task and the task will be available to be listed for other users. For other users, when they refresh the list or ask to show a new task list, the system will evaluate the eligibility and show the task as per sequence. The unassigned task will be postponed and shown at end of the task list.
- Skip Task:
  - This exceptional behavior will postpone the task to the end of the task list for the same user in same login. The task will still be assigned to the same user and hence, won't be available for other users. If the user logs back again, then task sequencing will be done for all the tasks, including the skipped tasks as per the user eligibility.

Manage Aisle Congestion in Task Assignment

The task component can perform aisle congestion checks before assigning the task to the user. Narrow aisles need to be modeled

Copyright © 2026 Manhattan Associates, Inc.

as travel zones. Travel zones need to be configured as a new zone of type ‘travel’ in zones UI. All the locations belonging to the narrow aisle need to be configured with that travel zone. Travel zone restrictions need to be configured with the proper ‘max allowed user’ count.
The task header will be updated with the travel zone. As per the task type, the system will consider either source location or destination location of the 1st task detail to compute the travel zone on the task header.

- For Pick task – 1st task, the detail’s source location will be considered to update the travel zone.
- For Putaway (both Inbound and Outbound) task - 1st task detail’s destination location will be considered to update the travel zone.
- For Cycle count task - 1st task detail’s source location will be considered to update the travel zone.

When task parameters 'Will the system check for travel zone congestion during a task assignment ?' parameter is set as Yes, the travel zone is not blank on task and travel zone restriction is configured, the system will perform congestion checks. The system will compare the current numbers of users in that travel zone vs. the maximum number of users allowed in the same travel zone. If the travel zone (physical aisle) is already occupied with max number of users, then the system will not assign the task.

- In 'Assign Task' mode, the system will not assign a task which needs to be executed in a congested travel zone.
- In 'Enter Task' mode or container scan mode (a valid assignable task is available for the container), the system will show a warning message to the user when the travel zone is congested.
- In 'Task List' mode, the system will not show the tasks which are in a congested travel zone.

When the travel zone is not congested and a task can be assigned to the user, the system will assign the task to the user or allow the user to execute the task in 'Enter task' mode. The system will create travel zone usage records to keep track of the number of users in a travel zone.

- This information will be shown in the 'travel zone usage' UI. The system will show the Travel zone, User and the Task id which is being executed by the user, and the created timestamp.
- Supervisors will have the capability to systematically clear/delete the travel zone usage from the UI.
- Once the task execution is complete, the system will delete the travel zone usage record to indicate the travel zone is available.

Note: Task break criteria need to be configured properly to create the task having multiple details that belong to a single travel zone where congestion management is required.

The system won’t be performing the congestion check for the following:

- For the secondary task created in chaining mode. For example: Pickup task that creates a putaway task.
- For another location (other than the original task location), when making exceptions during task execution, for example, users opted for an alternate location during picking and the solution suggested another location that is occupied by a user.
- When the user is executing in menu modes, tasks are created and executed in the backend. Example: menu mode system-directed putaway.
- For the unassignable tasks.

The solution won’t maintain the users available in the travel zone when user-directed transactions are used, and there won't be any details in the Travel Zone Usage screen.

Copyright © 2026 Manhattan Associates, Inc.

User Metrics

Task Assignment keeps track of users on the floor through the User Metrics records on the User Metrics UI. Each user metrics record keeps track of the following metrics for a user:

Metric	Description
Active	Flag indicating if the user is active on the floor
Current Location	The current location of the user based on the location scan or the task detail currently in progress
Available Location	The Location the user will be when he completes the task. This is based on the assumption that the user will complete the task and will not cancel or skip the task. If the user is not working on a task, the available location will be null.
Available Time	The estimated time it will take to complete the task the user is working on. This calculation is based on the assumption that the user will complete the task and will not cancel or skip the task or task details. If the user is not working on a task, the available time is 0.
Current Task Group	The Task Group the user is currently working in.
Current Task Pool	The Task Pool the user is currently working in.
Current Zone	The Task Movement Zone the user is currently working in.
Current Vehicle Type	The Vehicle Type the user is currently working on.
Current Vehicle	The vehicle the user is currently working on.
Printer	The printer is currently assigned to the user.

Task Assignment uses these metrics when assigning tasks to users through Just In Time and Schedule-based assignment. The system uses the location and timing information in the user metrics in order to perform distance and timing calculation and evaluation in order to assign tasks to users.

Exception Behaviors during Task Execution

The user can exit the task during task execution. The solution allows the user to choose an exception behavior reason code. Based on the exception behavior reason code, the solution does the following:

- Unassign task: The solution unassigns the task from the current user, which can be assigned to another eligible user.
- Conditionally unassign task: The solution retains the task assigned to the user if the task is executed partially; otherwise, the solution unassigns the task if the task is not executed at all. When determining whether the task is executed partially, the canceled task details won't be considered.
- Skip task: The solution retains the task assigned to the user so that it cannot be assigned to any other user. The user can enter the task manually, or the task is suggested to the user when the user is not eligible for any other task.

> **Note:** When the solution unassigns, conditionally unassigns or skips the task, the solution sequences the task as the last task in the list (after applying the task pool sequencing) for the current user in the current session.

- Locate container: When exiting a task, the solution moves the container to a Pick and Drop location.

Task Completion

Users have two options for starting a task: they can manually select a task by either entering a task id or scanning a container that has a task assigned to it, or they can request a task from Task Assignment. If the user manually selects a task, the Task Assignment will check if the user is eligible to work on the task based on their Task Group assignment. If the user is not eligible to work on the

Copyright © 2026 Manhattan Associates, Inc.

task then the system will display an error.

> **Note:** The system can be configured to create a new transaction similar to 'Assign Task' with which system automatically assigns a task to the user. The difference in this new transaction is that at the end of current task, system prompts the user to proceed with the next task or not.

Users have the ability to select an in-progress task to complete by scanning a container in the select task screen, but this capability is dependent on Task Assignment configuration. If the system is configured to not allow to select an in-progress task, the system will display an error when a user selects an in-progress task. If the system is configured to allow to select an in-progress task, the system will display a warning when a user selects an in-progress task; the user can then accept the warning and move forward with completing the task at hand.
When a user is assigned a task, they have the ability to either skip the task detail or skip the task entirely. When this happens, the system will assign the user the next available task and the user metrics record for that user will be updated appropriately.
A user also has the ability to break down the task or stop the task for a predefined exception scenario. They will be prompted to enter the appropriate information and then the user will receive the next available task to complete.

Task Priority Bumping

Task Assignment has the ability to update the priority of a task based on rules. When users configure the Task Pool Strategy, they have the ability to enter a priority that will be stamped on the task when selected by the Task Pool Strategy Rule Conditions. The task priorities can be updated when they are assigned to a particular task pool, or they can be updated based on the amount of time the task has been in the system without being worked on. When the priority of a task has been updated, the system will trigger task pool reevaluation in order to determine if the task needs to be moved to another pool; moreover, it will also either re-sequence the tasks in a pool or reevaluate the task pool schedule for the updated tasks depending on the task pool assignment method.

Manual Task Release

Tasks that are configured to be created in held status can be released manually from the wave run screen. The action button "Release Held Tasks" will allow the selection of one or more task pool strategies to perform the release. It is recommended not to use both scheduled task pool assignment and manual task release in parallel. The task pool strategies that need to be considered for manual task release from wave run UI need to have the configuration "Allowed for Manual Task Release" as "Yes".

Task Re-evaluation

The re-evaluate action is used to trigger the logic to reevaluate the following:

1. Task pool
2. Task priority
3. Assignable task groups

> Please note, at the time of the re-evaluation, the system will evaluate the task for all the three things mentioned above. While evaluating the assignable task group, the system will consider only the open task details of the task and update the assignable task group appropriately.

Re-evaluation can be triggered/initiated in two ways:

1. Manual action in 'Task pools' UI
2. Reevaluation scheduler job (for more details on the scheduler job parameters and configuration, please refer to the Task scheduler guide)

The system checks the following conditions while doing reevaluation.

- The Task Pool on the task matches the task pool for which the re-evaluation is performed.

- The task is an assignable task.
- The task is in any one of the following statuses:
  - Ready For Assignment
  - Held
  - Unavailable

Users can choose a task pool strategy in the UI while doing the reevaluate action or a task pool strategy can be configured in the task reevaluation job scheduler parameter.

1. If there is a task pool strategy selected during reevaluation, then the system will process the reevaluation only for the tasks matching the transaction type and task detail type mentioned in the task pool strategy.
2. When the task pool strategy is not configured in the job schedule or not selected by user:
   - Then the system reevaluates the tasks using the matching transaction type and type Id if configured in any task pool strategy.
   - If a matching task pool strategy is not found in the above step, then the system uses the default task pool strategy.

Task Zone Proximity and Task Path Restrictions

Task Zone Proximity

Users have the ability to define the distance between Task Movement Zones by defining Task Zone Proximities. For each Task Zone Proximity record, the user must define a source zone, a destination zone, and a distance between the zones. Task Zone Proximity is used when Task Pool is using Just in time assignment and Task Proximity is used as a sequence criterion. For this specified pool, the system uses the Task Zone Proximity records and the users' current zone in the user metrics to perform distance calculations in order to assign users to tasks.

Note: When configuring Task Zone Proximities, the user must define a Task Zone Proximity record for each zone where the source zone = destination zone and the proximity = 0. This lets the system know that tasks in the same zone have 0 distance between them and should be done sequentially before leaving that zone.

While sequencing the tasks using zone proximity, the system explicitly does the nulls last. In UI, it can be configured either way, but regardless of what it is in the UI, the system will always do nulls last.

Copyright © 2026 Manhattan Associates, Inc.

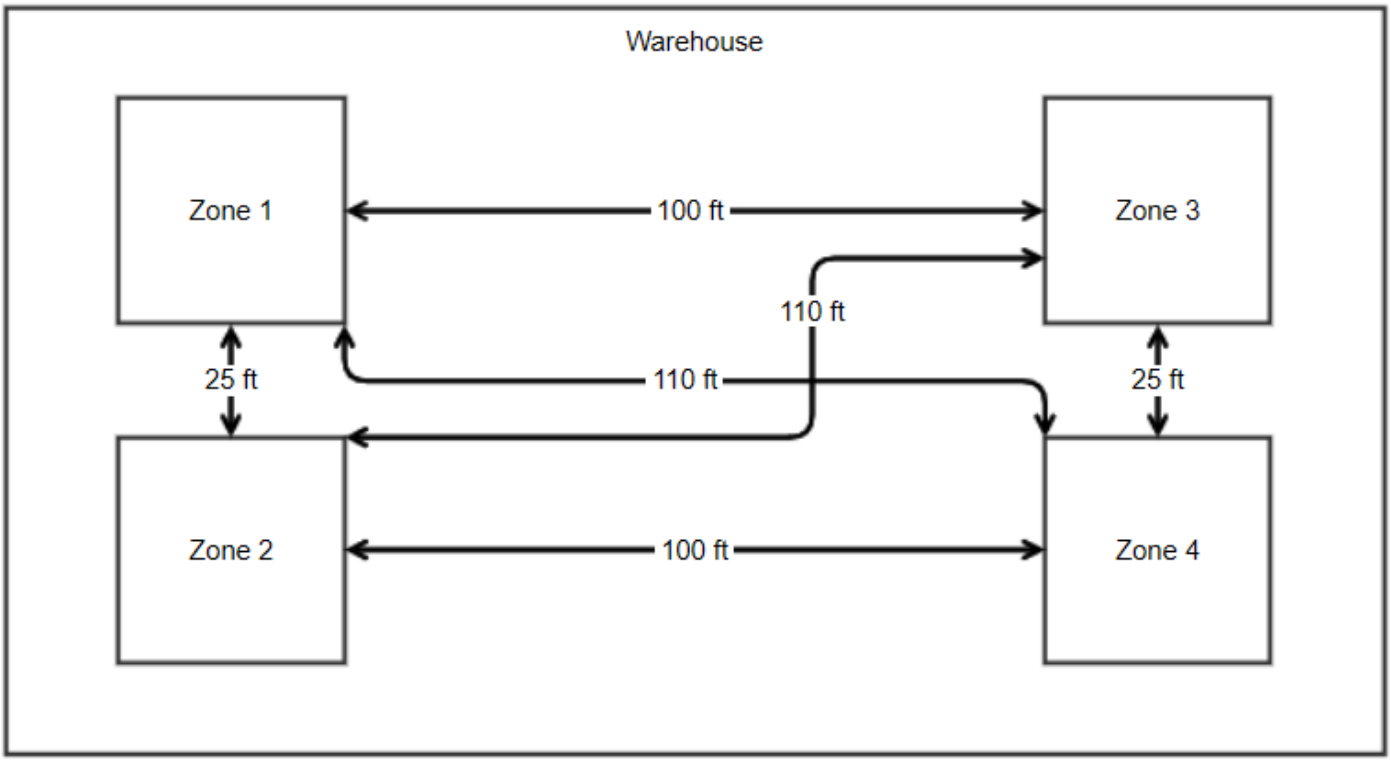

Task Path Restrictions

Users who meet the task eligibility requirements can start a task in the source, Task Movement Zone, and the destination as Task Movement Zone on any vehicle in order to complete the task.

If users want to restrict the ability of employees or vehicles from going directly from a source Task Movement Zone to a destination Task Movement Zone, then, they can create a Task Path Restriction.

For each Task Path Restriction, users can either block an employee from traveling directly from a source Task Movement Zone to a destination Task Movement zone entirely, or they can force the employee to stop at a drop Task Movement Zone while completing a task.

When configuring Task Path Restrictions, users must provide a Task Group in order to indicate to the system which employees are eligible for this Task Path restriction. Users can thereby restrict a Task Path based on the Transaction Type, Transaction Name, and Vehicle Type of the Task being completed. In order to indicate if the task path restriction is blocking any entry into the destination zone or requiring the employee to stop at a drop zone, users can toggle the "Destination eligible via drop" flag on the Task Path Restriction. Users have the ability to define the Task Path Restriction for a single source zone and destination zone combination or they can make a general restriction for a specified source zone/destination zone.

For example, if a user specifies a Task Path Restriction for a particular Transaction Type, Transaction Name, Source Zone, and Drop Zone, then all tasks for that Transaction Type and Transaction that are coming out of the Source Task Movement Zone must stop at the specified Drop Task Movement Zone.

In Task Path Restriction, if the exact zone match is checked, WM will check an empty zone in Task Path Restriction with an empty zone in the task. If an exact zone match is not set, when a zone is left empty in Task Path Restriction, it applies to all zones in the task.

> **Note:** The same logic applies to the Destination Zone as well.

This process of adding Task Path Restrictions allows the user to define Task Paths across the warehouse without explicitly calling out every Source Zone and Destination Zone combination; moreover, this process will save configuration time for the user.

Copyright © 2026 Manhattan Associates, Inc.

- The Task Path Restriction is only for Transaction Types Putaway, Outbound Putaway, Load, and Yard.
- For example: Replenishment generates a Pick Task to Pull from Reserve. Once that task is completed, a Putaway Task is created. The Pick Task does not need the Task Path Restriction. The Putaway Task needs Task Path restriction. The task restriction is set from a Source Zone = blank, exact zone match required = Yes, Destination Zone = destination zone and the Drop Zone as the Drop Zone. The movement from Drop to Final does not need a Task Path Restriction.

Examples

Example 1:

Putaway execution with task path restriction:

Task Group A					
Transaction Type	**Transaction**	**Vehicle Type**	**Source Zone**	**Destination zone**	**Exact Destination zone match enabled?**
Putaway	null	null	East Staging	null	False

Task Path Restrictions							
Task Group	**Transaction Type**	**Transaction**	**Vehicle Type**	**Source Zone**	**Destination Zone**	**Drop Zone**	**Eligible Via Drop**
Task group A	Putaway	null	null	East Staging	Reserve Zone C	Drop Zone 1	True
Task group A	Putaway	null	null	East Staging	Reserve Zone D	Drop Zone 1	True

- When a putaway task having source zone East Staging and destination zone as Reserve Zone A is executed by the user:
  - The system will allow the user to complete the putaway task without any drop location scan.
- When a putaway task having source zone East Staging and destination zone as Reserve Zone C is executed by the user:
  - Based on the task path restriction above, the system will direct the user to scan a drop location in drop zone 1.

Example 2:
For the Replenishment Tasks:
Eligible to pick/pull from any source task movement zone and eligible to perform the Put in specific destination task movement zone

Task Group A						
Transaction Type	**Transaction**	**Vehicle Type**	**Source Zone**	**Exact Source Zone match**	**Destination Zone**	**Exact Destination Zone match**
Pick	null	null	null	FALSE	Active Zone A	True or false (Does not matter)
Putaway	null	null	null	FALSE	Active Zone A	True or false (Does not matter)

Copyright © 2026 Manhattan Associates, Inc.

Task Group B						
Transaction Type	**Transaction**	**Vehicle Type**	**Source Zone**	**Exact Source Zone match**	**Destination Zone**	**Exact Destination Zone match**
Pick	null	null	null	FALSE	Active Zone B	True or false (Does not matter)
Putaway	null	null	null	FALSE	Active Zone B	True or false (Does not matter)

Task Group C						
Transaction Type	**Transaction**	**Vehicle Type**	**Source Zone**	**Exact Source Zone match**	**Destination Zone**	**Exact Destination Zone match**
Pick	null	null	null	FALSE	Active Zone C	True or false (Does not matter)
Putaway	null	null	null	FALSE	Active Zone C	True or false (Does not matter)

Task paths restrictions configuration available for Task Group C:

Task Path Restrictions							
Task Group	**Transaction Type**	**Transaction**	**Vehicle Type**	**Source Zone**	**Destination Zone**	**Drop Zone**	**Eligible Via Drop**
Task group C	Putaway	null	null	null	Active Zone C	Drop Zone 1	True

Let us consider that below are the replenishment tasks got created:

Task ID	Transaction Type	Task Detail	Source Zone	Destination Zone
Task 1	Pick	1	Reserve Zone A	Active Zone A
Task 2	Pick	1	Reserve Zone A	Active Zone B
Task 3	Pick	1	Reserve Zone B	Active Zone C
Task 4	Pick	1	Reserve Zone A	Active Zone C

After Task group eligibility check, the system will assign the 'Assignable task groups' like below:

Task ID	Assignable Task groups
Task 1	Task Group A
Task 2	Task Group B
Task 3	Task Group C
Task 4	Task Group C

While Executing the above tasks:

- User will be able to completely execute both pick and put part of **Task 1, Task 2** without any drop.

Copyright © 2026 Manhattan Associates, Inc.

- But, while executing the Task 3 and 4, due to the task path restriction, system will direct the user to drop the container at Drop Zone 1.

Replenishment Matching

This process allows users to organize picking tasks and provides visibility to identify the tasks that must be executed for a wave's pick tasks.

Considerations:

- Only supported for the non-bulk allocation flow, where pick/pack type allocations are created.
- Replenishment Matching is not supported for Cascade replenishment flow.

The solution considers all types of replenishment tasks (including LTR and Top-up), putaway, and slotting tasks during the replenishment matching process. Held replenishment tasks are also considered for matching at the end of the process.

Configuration: The solution triggers replenishment matching after creating tasks only when the task parameter '*When should system perform replenishment matching?*' is set as *'After task creation*'.

The replenishment matching process is triggered only after all the tasks are created in Task after order planning run. Also, the solution will perform replenishment matching only for the tasks available at that time.

The system stores the matching information in the 'Task Detail Planning' entity in Task component. Here the system keeps the information of the picking task, picking task detail, dependent task id, dependent task detail id, dependent task detail type and dependency execution status.

Dependency Execution Status: The 'Dependency execution status' indicates whether the pick task, which was initially set as dependent on another task and its detail (such as replenishment, slotting, or putaway), remains dependent or not. Valid values are 'Pending' and 'Completed'.

Copying the much-needed attributes to the matched task

The system is designed to copy some of the selected attribute's value during the replenishment matching process. These are:

1. Execution Sequence
2. Loading Sequence
3. Scheduled Ship Date Time
4. Target Completion Time

These attributes can be used in task pool sequencing criteria to drive the task assignment in the desired sequence. This process ensures the most critical picking and matched replenishment tasks are executed on time.

- The Execution and Loading Sequence attributes are added to the original order line and order line entities and UI screens. These attributes can be updated by host system. After DO creation, these attributes can be updated if the order line has not yet been allocated. During wave run, these two attributes are copied to the allocation and WR allocation records and the task detail after task creation. Scheduled Ship Date Time and Target Completion Time can be updated on the task detail before task creation.
- The Shipment Orchestration process can also populate the Execution Sequence, Loading Sequence and Target Completion Time values through the use of the Shipment Orchestration Plan uploaded. More information on Shipment Orchestration can be found in the Shipment Orchestration Process Guide.

Copyright © 2026 Manhattan Associates, Inc.

When the system is configured to perform replenishment matching, during the task creation process in the task component, these attributes are propagated to the task header level from task detail.
During the replenishment matching process, the system propagates these attributes from the pick task header to the matched task header. In the case of a multi-detail task, the lowest alphanumeric value of the execution and loading sequence of the details is copied to the task header. The system first determines the lowest execution sequence value and then determines the lowest loading sequence under the selected execution sequence. Example below:
Example:

Task	Task Detail	Execution Sequence	Loading Sequence
Task 1	Pick Task detail 1	1	3
	Pick Task detail 2	1	4
	Pick Task detail 3	2	1
	Pick Task detail 4	2	2

The system will select the lowest execution sequence here — the lowest of 1,1,2,2 will be 1.
And then the system will choose the lowest value of loading sequence under execution sequence 1 - the lowest of 3,4 will be 3.
As a result, the task header execution sequence will be 1 and loading sequence will be 3.
Also, the execution and loading sequence are copied to the new order line when it is split from the original order line and to the chase or shortage order line when the original order line is shorted for chase.

> **Note**: The execution sequence and Loading Sequence are updated on the task header only during the task creation step. The solution does not re-evaluate these attributes.

The following data illustrates the snapshot before the pick wave is run:

Task ID	**Created Time**	**Type**	**Detail Type**	**Item**	**Quantity**	**Source Locn**	**Dest Locn**
Repln Task 1	T1	PICK	REPLENISHMENT	Item A	50	RESRV_1	ACTV_1
Repln Task 2	T2	PICK	REPLENISHMENT	Item A	50	RESRV_1	ACTV_1
Repln Task 3	T3	PICK	REPLENISHMENT	Item B	50	RESRV_2	ACTV_2
Repln Task 4	T4	PICK	REPLENISHMENT	Item C	50	RESRV_3	ACTV_3
Dest Locn	**Item**	**OH**	**TBF**	**Allocated**			
ACTV_1	Item A	20	100	0			
ACTV_2	Item B	20	50	0			
ACTV_3	Item C	20	50	0			

The following data denotes the Order snapshot:

Order	**Order Line**	**Item**	**Quantity**	**ExecutionSequence**	**LoadingSequence**
ORDER_1	1	Item A	20	SEQ-1	
ORDER_2	1	Item A	50	SEQ-1	

Copyright © 2026 Manhattan Associates, Inc.

ORDER_3	1	Item B	20	SEQ-1	
ORDER_4	1	Item A	50	SEQ-2	
ORDER_5	1	Item B	50	SEQ-2	
ORDER_6	1	Item C	20	SEQ-2	
ORDER_7	1	Item C	50	SEQ-3	

After the first pick wave is run, the following updates occur:

- Consider the first three orders are selected.
- 70 units are allocated for ITEM A and 20 units for Item B.
- The task header is updated with the execution sequence, SEQ1 for the pick tasks, Pick Task 1, and Pick Task 2.

The following task details are created:

Task ID	Created Time	Type	Detail Type	Detail Id	Item	Quantity	Source Locn	Dest Locn	ExecutionSequence
Pick Task 1	T1	PICK	Pick/Pack	1	Item A	20	ACTV_1		SEQ-1
Pick Task 1	T1	PICK	Pick/Pack	2	Item A	50	ACTV_1		SEQ-1
Pick Task 2	T2	PICK	Pick/Pack	1	Item B	20	ACTV_2		SEQ-1

Consider there are four replenishment tasks created for picking as follows:

Task ID	Created Time	Type	Detail Type	Detail Id	Item	Quantity	Source Locn	Dest Locn	ExecutionSequence	LoadingSequence
Repln Task 1	T1	PICK	REPLENISHMENT	1	Item A	50	RESRV_1	ACTV_1	**SEQ-1**	
Repln Task 2	T2	PICK	REPLENISHMENT	1	Item A	50	RESRV_1	ACTV_1		
Repln Task 3	T3	PICK	REPLENISHMENT	1	Item B	50	RESRV_2	ACTV_2		
Repln Task 4	T4	PICK	REPLENISHMENT	1	Item C	50	RESRV_3	ACTV_3		

When the replenishment matching is triggered, the solution matches Pick Task 1 with replenishment tasks for Item A and populates the Task ID (Pick Task 1), Task detail ID (2), and dependent task ID (Repln Task 1).
Note that for order 1 (that is, 20 units of Item A are replenished by on-hand, and therefore, the solution has populated the Pick Task with Detail ID 2, which has 50 units to be replenished).

Ability to Copy the Pick task priority to the matched task

The system ensures the most critical picking tasks are executed on time by automatically copying the picking task priority to the matched replenishment task. To copy the priority during the replenishment matching process, set the parameter '*Should the system copy the pick task priority to the matched task during replenishment matching process?* to 'True' in the Task Parameters screen.

Using 'Priority for Replenishment Matching parameter' on Task Pool

The Priority for Replenishment Matching parameter allows users to specify the priority for each task pool. The solution uses the specified priority and the task pool sequence criteria (if configured) to perform replenishment matching. This is only needed when customer implementation has multiple task pools.

Consider the following task pool setup:

	Task pool	Replenishment **Matching Seq**	**Task Assignment Sequence**	
Picking Task	TP A	1	TP A	ExecutionSequence Asc
	TP B	2	TP B	ExecutionSequence Asc
Replenishment Task	TP C	3	TP C	ExecutionSequence Asc, then Priority Asc

Snapshot of replenishment records:

	Task ID	**Created Time**	**Type**	**Detail Type**	**Item**	**Quantity**	**Source Locn**	**Dest Locn**
Replenish Storage	Repln Task 1	T1	PICK	REPLENISHMENT	Item A	50	RESRV_1	ACTV_1
Replenish Storage	Repln Task 2	T2	PICK	REPLENISHMENT	Item A	50	RESRV_2	ACTV_1
Replenish Storage	Repln Task 3	T3	PICK	REPLENISHMENT	Item B	50	RESRV_3	ACTV_2
Replenish Storage	Repln Task 4	T4	PICK	REPLENISHMENT	Item B	50	RESRV_4	ACTV_2

Before Wave	**Dest Locn**	**Item**	**OH**	**TBF**	**Allocated**
	ACTV_1	Item A	50	100	0
	ACTV_2	Item B	50	100	0

Order snapshot:

	Order	**Order Line**	**Item**	**Quantity**	**ExecutionSequence**	**LoadingSequence**
WAVE1	ORDER_1	1	Item A	50	SEQ-3	
WAVE1	ORDER_2	1	Item B	50	SEQ-2	
WAVE2	ORDER_3	1	Item A	50	SEQ-2	
WAVE2	ORDER_4	1	Item B	50	SEQ-1	

Assume that Wave 1 is run. Orders 1 and 2 have execution sequences, SEQ-3 and SEQ-2. Only replenishment records are created, and the task detail planning information is not updated since the quantity is allocated from on-hand. The solution creates Task 1 and Task 2 under Task Pool B.

Assume that Wave 2 is run. Orders 3 and 4 have execution sequences, SEQ-2 and SEQ-1. The solution creates Task 3 and Task 4 under Task Pool A.

Tasks created after wave runs:

Task	**Task Pool**	**Task Status**	**Execution Sequence**
Task 1	TP B	Ready for Assignment	SEQ-3
Task 2	TP B	Ready for Assignment	SEQ-2
Task 3	TP A	Ready for Assignment	SEQ-2
Task 4	TP A	Ready for Assignment	SEQ-1

Copyright © 2026 Manhattan Associates, Inc.

After the picking tasks are created, the replenishment matching is triggered and is processed based on the replenishment matching sequence (that is, the Priority for Replenishment Matching parameter) configured on each task pool.
The solution considers Task 3 and Task 4 (because they belong to TP A, which has the highest priority) and uses them to allocate 50 units from on-hand. The tasks created under TP B are used for replenishment matching, and the execution sequence is updated for Task 1 and Task 2 as follows:

	Task ID	Created Time	Type	Detail Type	Detail Id	Item	Quantity	Source Locn	Dest Locn	ExecutionSequence
Replenish Storage	Repln Task 1	T1	PICK	REPLENISHMENT	1	Item A	50	RESRV_1	ACTV_1	**SEQ-3**
Replenish Storage	Repln Task 2	T2	PICK	REPLENISHMENT	1	Item B	50	RESRV_1	ACTV_1	**SEQ-2**
Replenish Storage	Repln Task 3	T3	PICK	REPLENISHMENT	1	Item A	50	RESRV_2	ACTV_2	
Replenish Storage	Repln Task 4	T4	PICK	REPLENISHMENT	1	Item B	50	RESRV_3	ACTV_2	

While sequencing the tasks for the replenishment matching process:

- The solution keeps the 'In Progress' and 'Assigned' tasks at the top of the list. Then, it applies the sequencing logic to all the 'Ready For Assignment' tasks and then to all the Held tasks.
- When the solution uses the task pool sequencing criteria, the Proximity and Nearest location sequence is ignored during the replenishment matching process.

Propagating the vital replenishment matching information from the Pull to Putaway task

A replenishment task isn't done until the inventory is available in the final destination location. After a replenishment pull is completed, the solution would mark the replenishment task as 'complete', even though the floor user might still have a 30-minute journey to the final putaway location, or there might be a secondary task open for the final putaway (in case of drop scenario). To bridge this gap, the system intelligently links the initial pull task to the subsequent putaway or pick-up tasks, all vital data—such as priority, target completion time, execution sequence, etc. (complete list below) are preserved. Using this data, warehouse managers can accurately prioritize the most critical putaways, ensuring high demand pick locations are never left empty.
Below are the attributes which are copied from Pull task to the subsequent putaway / pick-up task:

> Only when 'replenishment matching' is enabled, the system will copy the attributes from the pull task to the subsequent putaway / pick-up task. To copy the priority, set the task parameter 'Should the system copy the pick task priority to the matched task during replenishment matching process?'.

1. Task Header:
   - Execution Sequence
   - Loading Sequence
   - Scheduled Ship Date
   - Target Completion Time
   - Priority
2. Task Detail:
   - Replen Planned Status
   - Replenishment Type

Earlier, during the replenishment matching process (after the wave run), the system would have created the 'task detail planning' entry for the pick task and matched the replenishment task. After the replenishment pull execution is done, the system now also updates the 'Task Detail Planning' entity with the subsequent putaway / pick-up task for that pick task.

Copyright © 2026 Manhattan Associates, Inc.

Example:

Forward picking Locations

Location	Item	On Hand	To be Filled	Allocated
Active Location A	Item A	20	50	50
Active Location B	Item B	0	50	40
Active Location C	Item C	10	50	30
Active Location D	Item D	0	50	50

Pick Tasks:

Pick Task Id	Pick task Detail	Item	Quantity	Location
Pick Task 1	1	Item A	20	Active Location A
Pick Task 2	1	Item B	40	Active Location B
Pick Task 3	1	Item C	30	Active Location C
Pick Task 4	1	Item A	30	Active Location A
Pick Task 5	1	Item D	50	Active Location D

Replenishment Tasks

Replenishment Task Id	Replenishment task Detail	Item	Quantity	Container	Source Location	Destination Location
Replenishment Task 1	R1-1	Item A	50	LPN_1	Reserve Location A	Active Location A
	R1-2	Item B	50	LPN_2	Reserve Location B	Active Location B
Replenishment Task 2	R2-1	Item C	50	LPN_3	Reserve Location C	Active Location C
	R2-2	Item D	50	LPN_4	Reserve Location D	Active Location D

Task Detail Planning after Replenishment Matching:

Task ID	Task Detail Id	Dependent Task ID	Dependent Task Detail Id	Dependent Task Detail Type Id	Dependency Execution Status
Pick Task 2	1	Replenishment Task 1	R1-2	Replenishment	Pending
Pick Task 3	1	Replenishment Task 2	R2-1	Replenishment	Pending
Pick Task 4	1	Replenishment Task 1	R1-1	Replenishment	Pending
Pick Task 5	1	Replenishment Task 2	R2-2	Replenishment	Pending

Let's consider, Replenishment Task 1 execution started. Once the pull is done, 'Task Detail Planning' snapshot will be like below:

Task ID	Task Detail Id	Dependent Task ID	Dependent Task Detail Id	Dependent Task Detail Type Id	Dependency Execution Status
Pick Task 2	1	Putaway Task X	P1-2	Putaway	Pending
Pick Task 3	1	Replenishment Task 2	R2-1	Replenishment	Pending
Pick Task 4	1	Putaway Task X	P1-1	Putaway	Pending

Copyright © 2026 Manhattan Associates, Inc.

Pick Task 5	1	Replenishment Task 2	R2-2	Replenishment	Pending

Once the Putaway is complete for LPN_1, that means Putaway task detail P1-1 is complete**. At this point,** 'Task Detail Planning' snapshot will be like below:

Task ID	Task Detail Id	Dependent Task ID	Dependent Task Detail Id	Dependent Task Detail Type Id	Dependency Execution Status
Pick Task 2	1	Putaway Task X	P1-2	Putaway	Pending
Pick Task 3	1	Replenishment Task 2	R2-1	Replenishment	Pending
Pick Task 4	1	Putaway Task X	P1-1	Putaway	**Complete**
Pick Task 5	1	Replenishment Task 2	R2-2	Replenishment	Pending

When Putaway for LPN_2 is complete, 'Task Detail Planning' snapshot will be like below:

Task ID	Task Detail Id	Dependent Task ID	Dependent Task Detail Id	Dependent Task Detail Type Id	Dependency Execution Status
Pick Task 2	1	Putaway Task X	P1-2	Putaway	**Complete**
Pick Task 3	1	Replenishment Task 2	R2-1	Replenishment	Pending
Pick Task 4	1	Putaway Task X	P1-1	Putaway	**Complete**
Pick Task 5	1	Replenishment Task 2	R2-2	Replenishment	Pending

Now, let's come to the execution of Replenishment Task 2.
Let’s consider that, due to task path restriction, Replenishment Task 2 execution will go through Drop location.
Once the pull is done for Replenishment Task 2, the system will create a putaway task (let's say this as Putaway task 1st leg). At this point, the 'Task Detail Planning' snapshot will be like below:

Task ID	Task Detail Id	Dependent Task ID	Dependent Task Detail Id	Dependent Task Detail Type Id	Dependency Execution Status
Pick Task 2	1	Putaway Task X	P1-2	Putaway	Complete
Pick Task 3	1	Putaway Task 1st leg	**P2-1**	Putaway	Pending
Pick Task 4	1	Putaway Task X	P1-1	Putaway	Complete
Pick Task 5	1	Putaway Task 1st leg	**P2-2**	Putaway	Pending

Once the user drops the pulled container in the dropped location, the system will complete this 1st leg putaway task.
After this, system will create the 2nd leg putaway task. This information will be updated in the task detail planning entity. At this point, the 'Task Detail Planning' snapshot will be like below:

Task ID	Task Detail Id	Dependent Task ID	Dependent Task Detail Id	Dependent Task Detail Type Id	Dependency Execution Status
Pick Task 2	1	Putaway Task X	P1-2	Putaway	Complete
Pick Task 3	1	Putaway Task 2nd leg	**P3-1**	Putaway	Pending
Pick Task 4	1	Putaway Task X	P1-1	Putaway	Complete
Pick Task 5	1	Putaway Task 2nd leg	**P3-2**	Putaway	Pending

Copyright © 2026 Manhattan Associates, Inc.

When user will execute the 2nd leg Putaway task and will complete the final putaway, the 'Task Detail Planning' snapshot will be like below:

Task ID	Task Detail Id	Dependent Task ID	Dependent Task Detail Id	Dependent Task Detail Type Id	Dependency Execution Status
Pick Task 2	1	Putaway Task X	P1-2	Putaway	Complete
Pick Task 3	1	Putaway Task 2nd leg	**P3-1**	Putaway	Complete
Pick Task 4	1	Putaway Task X	P1-1	Putaway	Complete
Pick Task 5	1	Putaway Task 2nd leg	**P3-2**	Putaway	Complete

Copyright © 2026 Manhattan Associates, Inc.